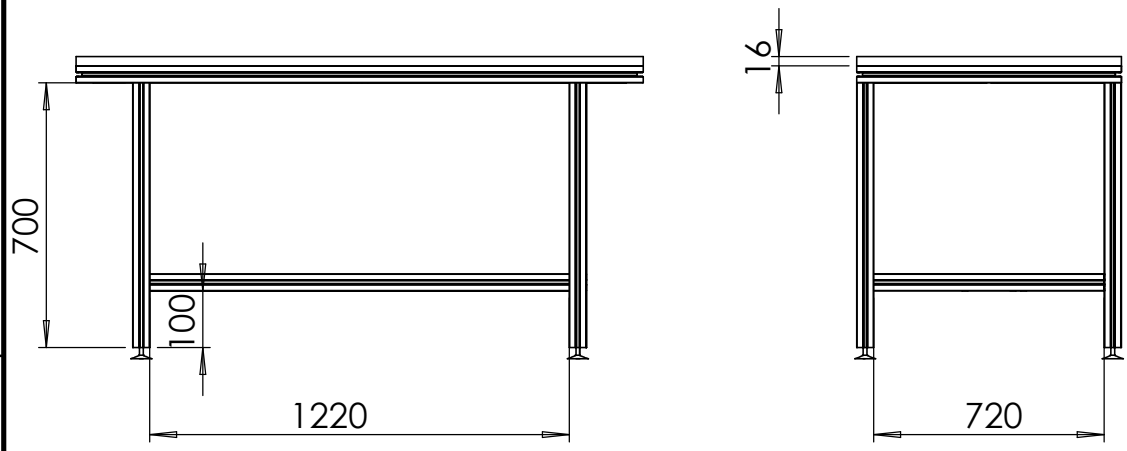

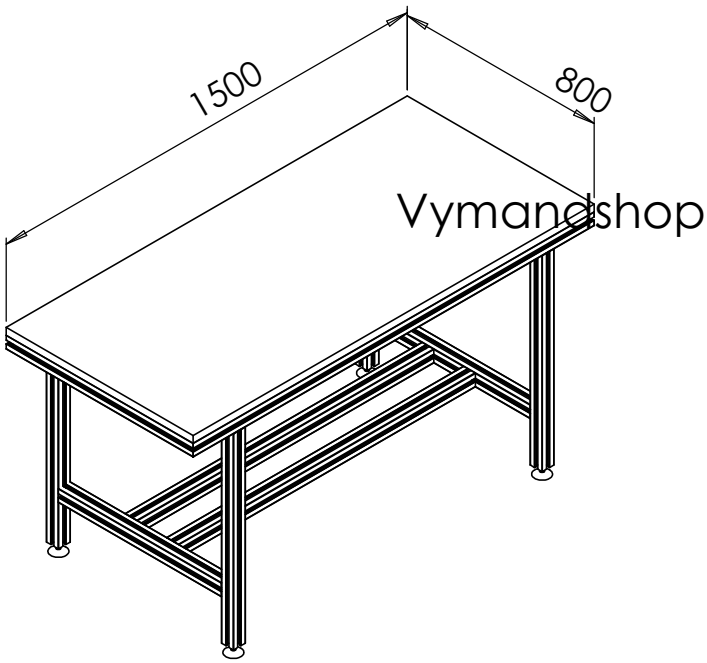

UNLESS OTHERWISE SPECIFIED: DIMENSIONS ARE IN MILLIMETERS SURFACE FINISH: TOLERANCES: LINEAR: ANGULAR:	FINISH:	DEBURR AND BREAK SHARP EDGES	DO NOT SCALE DRAWING / REVISION

	NAME	SIGNATURE	DATE
DRAWN	Eslami Fard		
CHK'D			
APPV'D	Lotfali		
MFG	Kohansal		
Q.A			

TITLE: Vymandshop

MATERIAL:

WEIGHT:

DWG NO. Dara 150x80

A4

SCALE:1:20

SHEET 1 OF 1