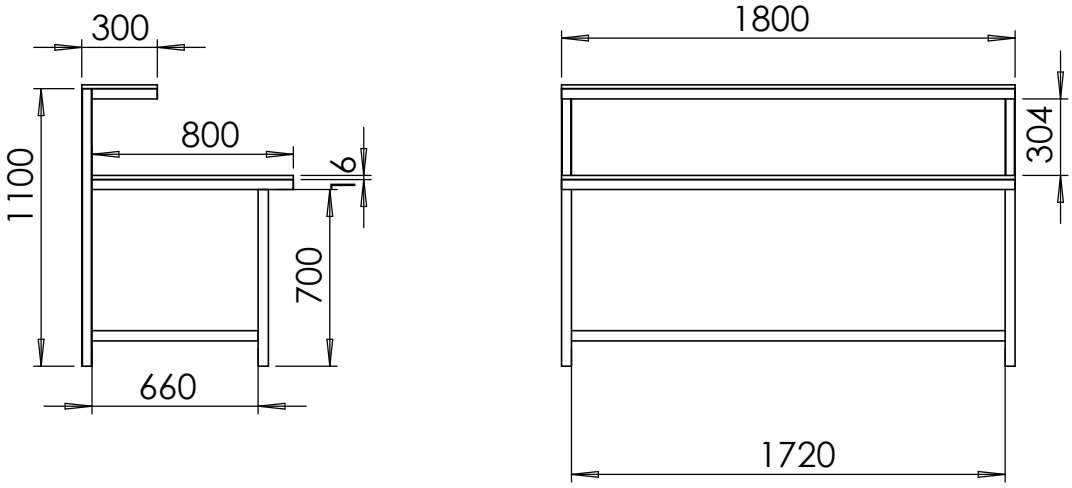

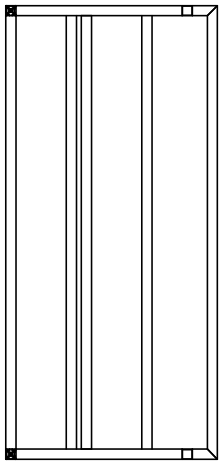

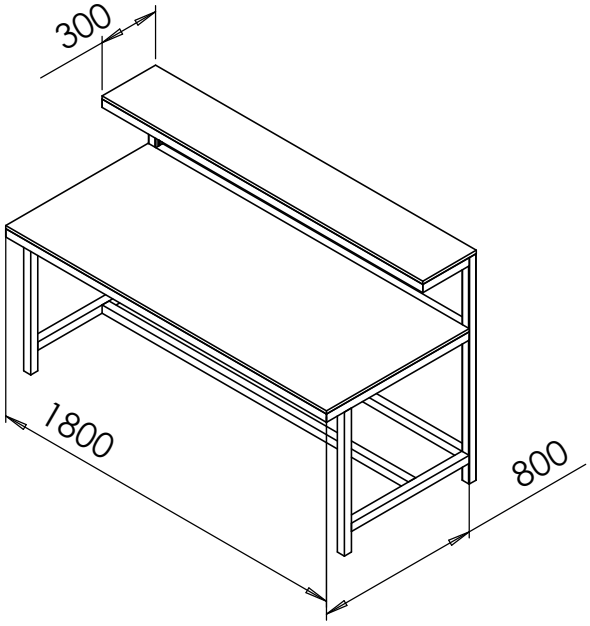

UNLESS OTHERWISE SPECIFIED: DIMENSIONS ARE IN MILLIMETERS SURFACE FINISH: TOLERANCES: LINEAR: ANGULAR:	FINISH:			DEBURR AND BREAK SHARP EDGES	DO NOT SCALE DRAWING	REVISION

	NAME	SIGNATURE	DATE
DRAWN	Eslami Fard		
CHK'D			
APPV'D	Sohrabi		
MFG	Kohansal		
Q.A			

TITLE:

MATERIAL:

WEIGHT:

DWG NO. Alunia

A4

SCALE:1:50

SHEET 1 OF 1